Mutant Secretagogin, a potential cause of ulcerative colitis, exhibits reduced affinity for SNARE complex protein SNAP-25

Nicholas Norris, Luis Sifuentes-Domínguez[1], Ezra Burstein[2]

Departments of Pediatrics Division of Pediatric Gastroenterology[1], Internal Medicine Division of Digestive and Liver Diseases[2]

UT Southwestern Medical Center, Dallas, TX

UTSouthwestern Medical Center

BACKGROUND and AIMS

Inflammatory Bowel Diseases (IBD) encompass a set of poorly understood multifactorial inflammatory disorders including Crohn's disease (CD) and Ulcerative Colitis (UC). Much effort has been made to identify genetic components underlying these conditions, and to date around 200 genetic variants associated with increased risk of IBD have been identified through genome-wide association studies. Recently, our lab identified three siblings with early-onset UC from consanguineous parents who were all homozygous for a rare hypomorphic variant in a gene (SCGN) encoding the calcium sensing protein secretagogin.

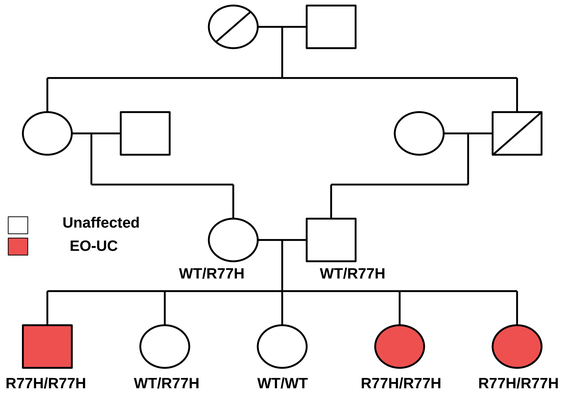

Family pedigree of three children diagnosed with early-onset UC, all homozygous for a mutation (R77H) in secretagogin.

Within the GI tract, secretagogin is localized specifically to enteroendocrine cells (EECs) suggesting an unforeseen role of EECs in IBD pathogenesis. This disease associated variant results in an amino acid substitution (R77H) in a Ca^{2+} binding region of secretagogin, which has been shown to interact with SNARE proteins in a Ca^{2+} dependent manner to mediate membrane fusion and exocytosis. Therefore, we examined whether this SCGN mutation impairs its Ca^{2+} dependent binding to the SNARE complex component SNAP-25 *in vitro*.

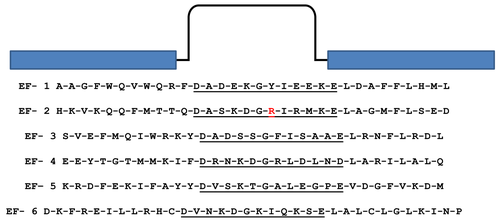

The R77H patient-associated mutation is located in a Ca^{2+} binding domain of secretagogin, shown in red above.

METHODS and RESULTS

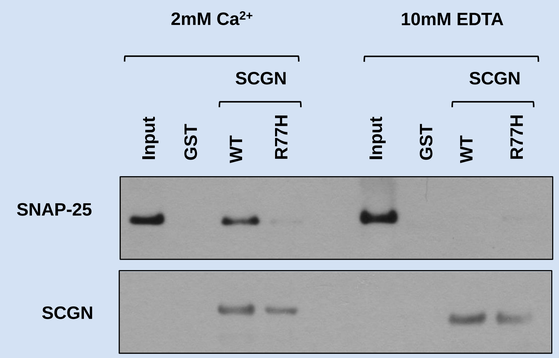

Fig 1: Mutant secretagogin prevents binding to SNAP-25. A GST pull-down assay was performed using recombinant GST fusion proteins of human secretagogin (wild type [WT] or R77H) immobilized to glutathione-agarose beads. These beads were used to affinity purify SNAP-25 from whole cell lysates of STC-1 cells, a mouse EEC tumor cell line. Because SNAP-25 interactions with secretagogin are Ca^{2+} dependent, whole cell lysates were prepared in either Ca^{2+} rich (2mM Ca^{2+}) or Ca^{2+} free conditions (10mM EDTA). The beads were washed and bound proteins were detected by SDS-PAGE and western blot analysis using appropriate antibodies. Mutant secretagogin bound significantly less SNAP-25 than WT in the presence of Ca^{2+}. In the absence of Ca^{2+}, no binding was observed. This phenomenon was replicated using murine secretagogin (WT and R77H) instead of human secretagogin (data not shown).

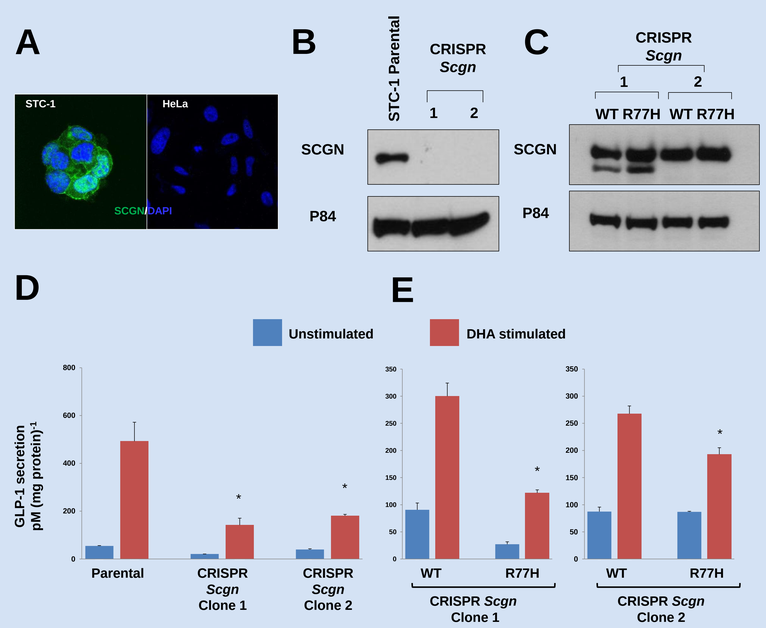

Fig 2: SCGN R77H is a hypomorphic mutation.

Fig 2 (continued). (A) Immunofluorescent co-staining of STC-1 and HeLa cell lines show secretagogin in STC-1 cells but not HeLa. **(B)** The CRISPR/Cas9 system was used to knockout secretagogin in two STC-1 clones. Successful knockout was confirmed by western blot. **(C)** *Scgn* expression was rescued in two clones using lentiviral vectors expressing either human WT or R77H secretagogin. Rescue was confirmed by western blot. **(D)** GLP-1 release was measured by ELISA from STC-1 cells before and after fatty acid stimulation (15 min with 100μM DHA). CRISPR *Scgn* deleted clones show reduced GLP-1 secretion compared with parental cell line (*=p<0.05). **(E)** R77H rescue clones show reduced GLP-1 secretion compared to WT (*=p<0.05). GLP-1 values normalized to total protein content.

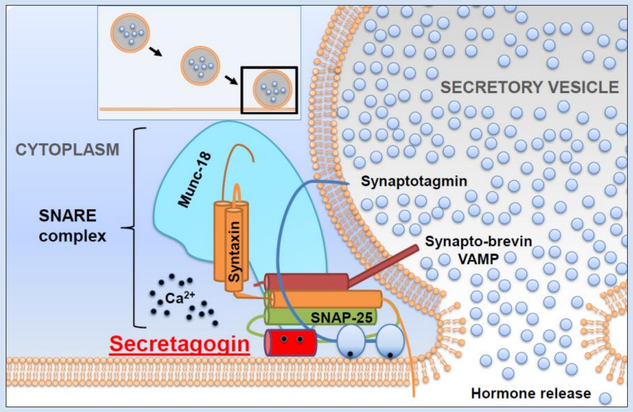

Fig 3: Model of Secretagogin interaction with SNARE complex proteins. SNARE complex proteins including SNAP-25 are pictured above. Secretagogin binds Ca^{2+} and couples with SNAP-25 to mediate hormone release. The R77H mutation in the Ca^{2+} binding region of Secretagogin disrupts this interaction, impairing secretory vesicle fusion with the plasma membrane and subsequent hormone release.

CONCLUSIONS

We confirm secretagogin interacts with SNAP-25 in a Ca^{2+} dependent fashion and that the R77H mutation, located in a Ca^{2+} binding pocket of secretagogin, disrupts its interaction with SNAP-25, representing a hypomorphic mutation. This finding is consistent with the recessive nature of SCGN mutation and strengthens its physiological relevance. Furthermore, it suggests that impaired exocytosis and hormone release from EECs contributes to the disease pathogenesis. Further study to elucidate which (if any) EEC secretory products play key roles in IBD prevention is needed. Understanding potentially aberrant paracrine mechanisms underlying IBD could open the door to novel treatments.